CUSTOMER DRAWING

REVISIONS			
REV.	D.C.N No	DESCRIPTION	DATE
D1	1415	FIRST ISSUE FOR QUOTATION	07/05/15
D2	1415	CHANGE SHAPE OF LOCATION PIN	14/05/2015
1	1415	FIRST ISSUE FOR PRODUCTION	27/05/2015
1A	1422	TITLE CORRECTED - P.SUTTON	03 JUN'15
2	1413	CONNECTOR BOX FINISH MODS. P.SUTTON	16/07/15
3	1434	FUSEBOX ADDITION & PROD RELEASE. PJS	10 SEPT'15
4	ECN1526	ADDITIONAL FUSEBOXES. P.SUTTON	07 FEB'2017

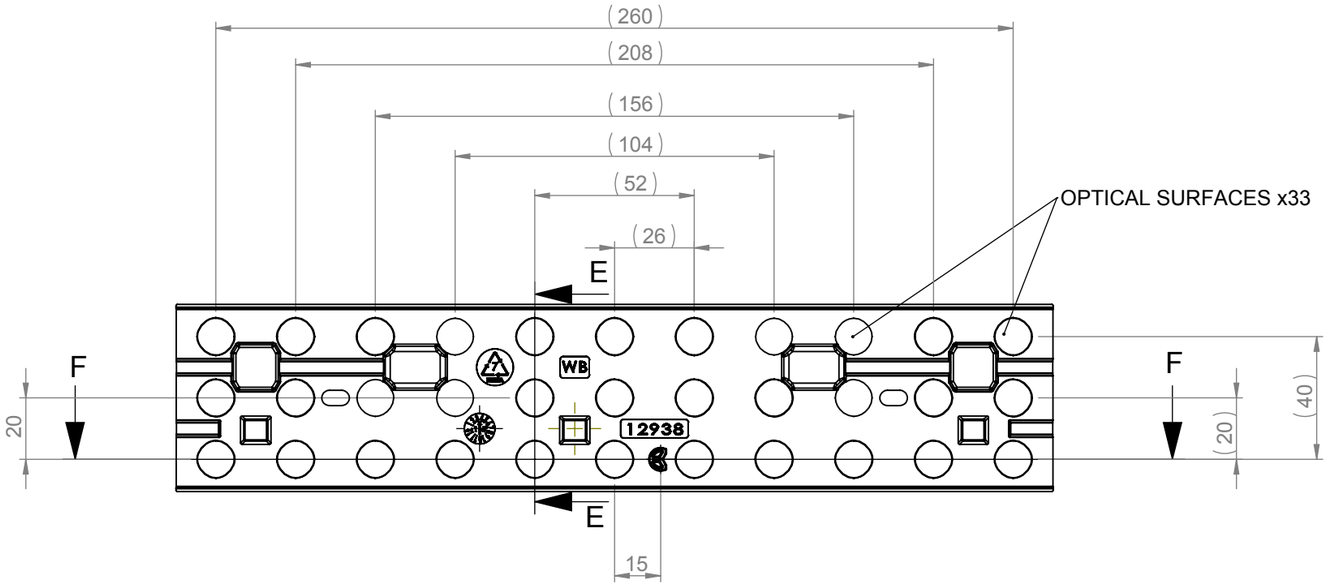

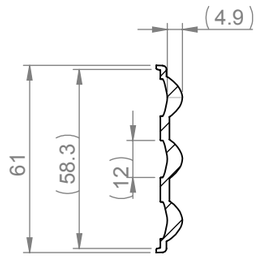

SECTION E-E
SCALE 1 : 2

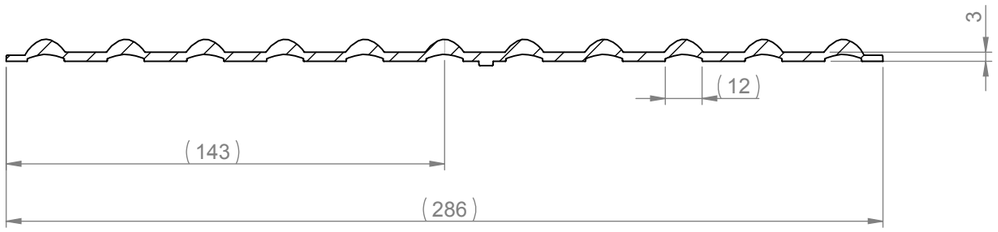

SECTION F-F
SCALE 1 : 2

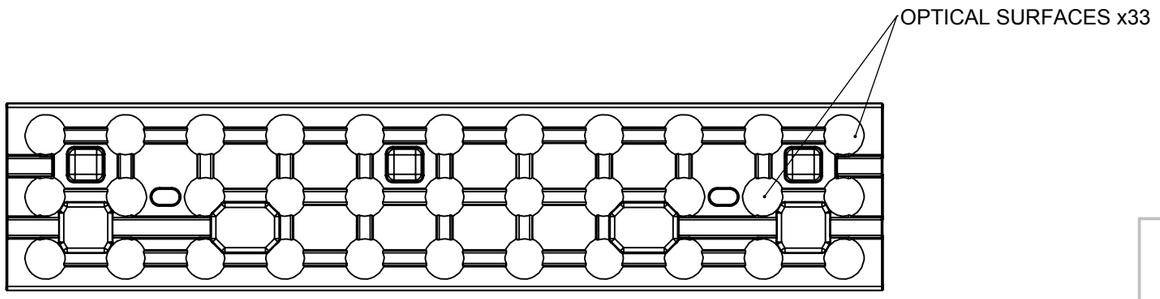

NOTES:

1 - MATERIAL: PMMA

2 - FINISH:
OPTICAL SURFACES ARE OPTICALLY POLISHED TO SPI-A1

3 - OVERALL PART THICKNESS = SEE 3D FILE

4 - GENERAL DRAFT 2°

5 - GENERAL FILLET 0.25MM

6 - DIMENSIONS IN BRACKETS ARE FOR INFORMATION ONLY AND NOT FOR INSPECTION

SHEET 2 OF 2

carclo Optics
Unit 6-7 Faraday Road
Rabans Lane Industrial Area,
Aylesbury, HP19 8RY, UK.
Tel: +44(0) 01753 575 011
sales@carclo-optics.com www.carclo-optics.com

Title	Mid-Power Array Wide Beam - ALTERNATE SYMMETRICAL FLANGE				
Drawn by	B.Bercot	Customer	CARCLO OPTICS	Scale	1:2
THIRD ANGLE PROJECTION	TOLERANCE ACCORDING TO NORM: DIN 16742 Tol Group TG6	CARCLO Optics CONFIDENTIAL: UNAUTHORISED COPYING, DISCUSSION & DISTRIBUTION PROHIBITED	DIMENSION IN mm	Format Size	A3
			CAD File	12938_Rev-4_WB_SBoard	
			Part N°	12938	RFQ N° 000297