carclo
technical plastics

# Diamond 37 Lens

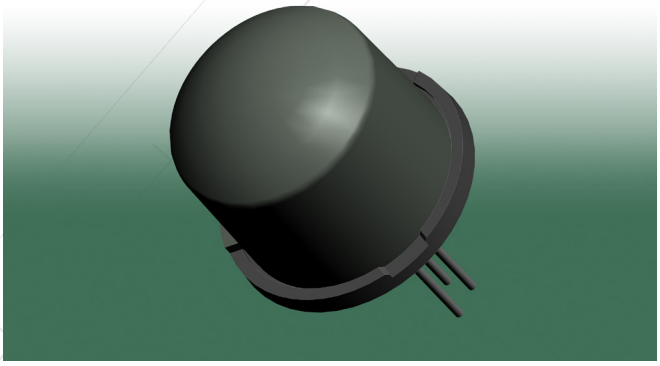

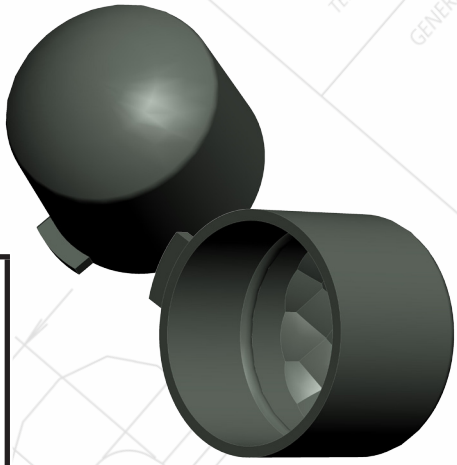

The Diamond 37 lens is a much improved version of the popular PF17 lens, with a wider field of view and higher resolution whilst maintaining the same overall daimeter.

Designed to be used in conjunction with Excelitas PYQ 1348* (0.8mm element size) detector which will result in 88 detection zones with equally distributed zone gaps.

The part is mechanically robust and is suitable for ceiling or wall mounting. The base ensures that the PYQ 1348* (0.8mm element size) pyro is mounted at the optimal focal length every time.
Typical range of 5 - 10m.

Patent Pending

## Key Features

| | |
|---|---|
| Pyro mounting height | 7.9mm from top lens surface |
| Detection Angle | 98 Degrees |
| Focal Length | 8 mm |
| Material | Carclo HDPE |
| Colours | Natural, White, Black and Grey |
| Variants | With or without base |
| Compatible Detectors | PYQ 1348* (0.8mm element size) |
| Overall Dimensions (Ø x h) | 12.6 x 11.6 mm |
| Part No. | 12621 |
| Drawing No. | 70118 |

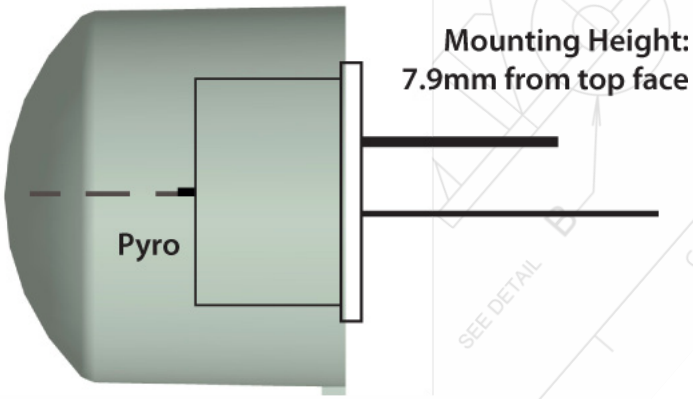


*Other detectors may work, but have not been tested with this lens at the current time.
Note: Field of View (FOV) diagrams are idealised. Exact zones may depend on mounting conditions, detector type etc. FOV diagrams have been raytraced in reverse, i.e. from detector to the floor.

carclo
technical plastics

Typical field of view diagram when used in conjunction with Excelitas PYQ 1348* (0.8mm element size) Detector with quad element configuration at a mounting height of 2.5 metres.

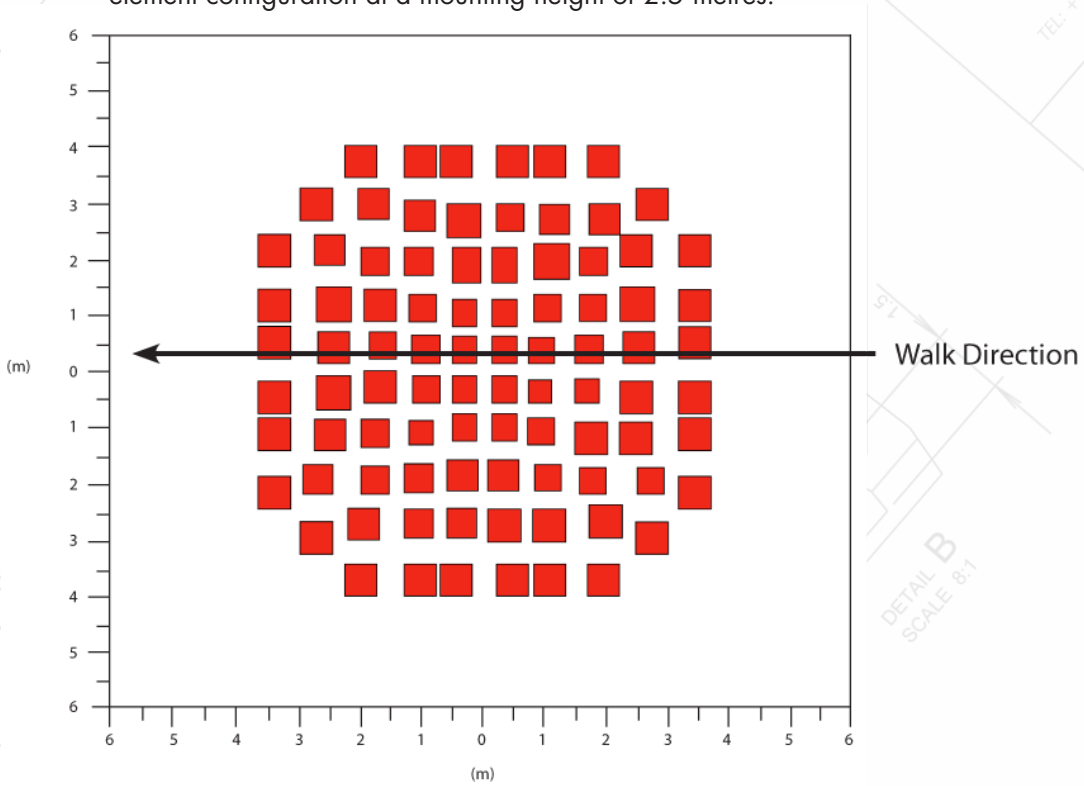


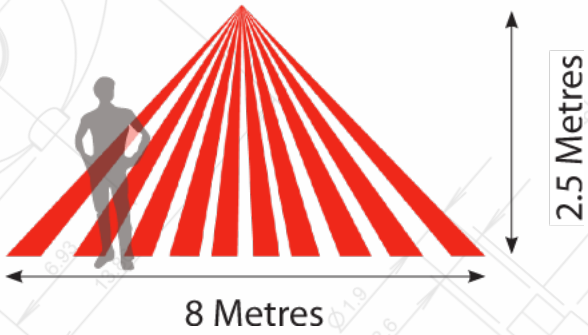


Signal response of PYQ134* (0.8mm element size) used with Diamond 37 in a straight line walk test simulation. Walk direction is shown by the arrow on field of view diagram above.

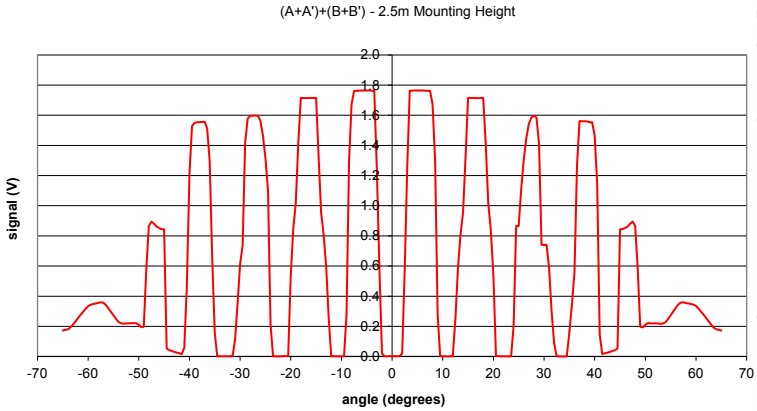


Mossburn Avenue
Harthill Industrial Estate
Harthill, Lanarkshire
ML7 5NP, Scotland
E.mail: grant.hallworth@carclo-plc.com
Tel: +44 (0)1501 751-447
Mob: +44 (0)774 020-5888

**Note: The beam patterns and signal response shown in this datasheet can be greatly effected by detector position and therefore are intended as a general guide only.**
**Note: Field of View (FOV) diagrams are idealised. Exact zones may depend on mounting conditions, detector type etc. FOV diagrams have been raytraced in reverse, i.e. from detector to the floor.**