REVISIONS					
REV.	DATE	D.C.N NUMBER	DESCRIPTION	CHECKED BY DATE	APPROVED BY DATE
1	14 OCT 2008	03/13/1356	INITIAL DESIGN RELEASE - P.SUTTON	PW 30/04/2013	MH 30/04/2013

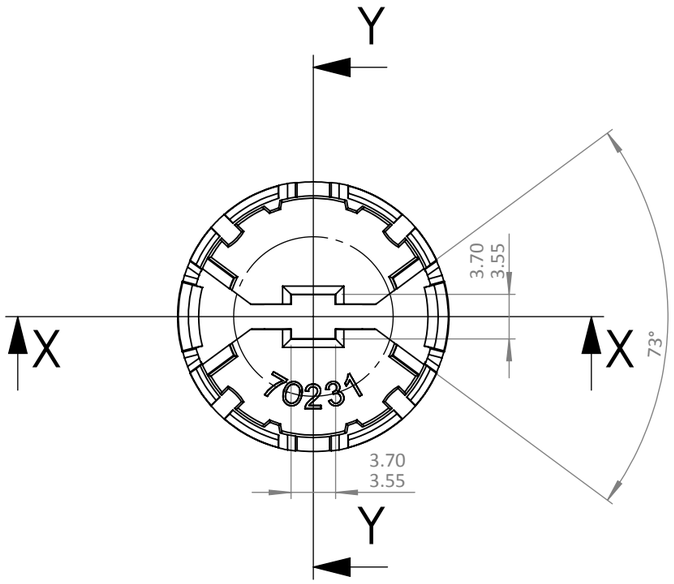

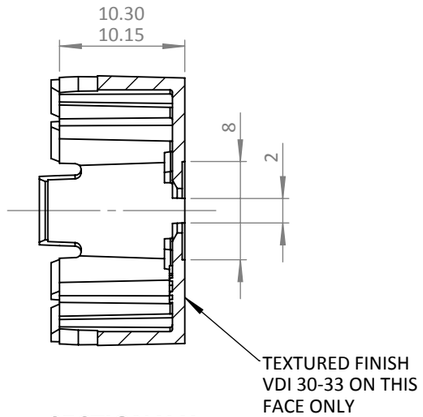

SECTION Y-Y

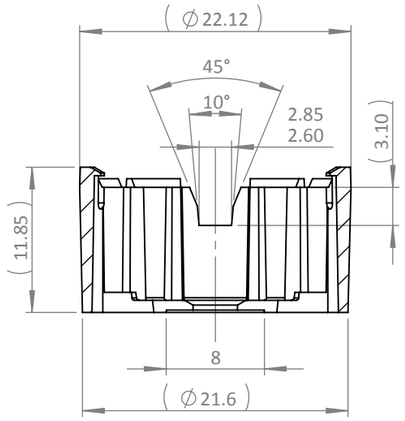

SECTION X-X

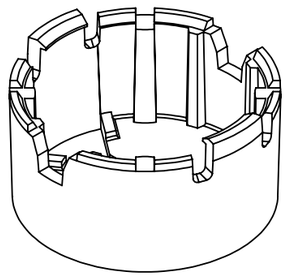

GENERAL 3D VIEW
SCALE 2:1

NOTES:

1 - MATERIAL: POLYCARBONATE

2 - GENERAL DRAFT 2°

PART NO.	
12742	BLACK
12743	WHITE
12744	CLEAR

CUSTOMER DRAWING

SHEET 2 OF 2

carclo Optics
103 Buckingham Avenue SL1 4PF, UK.
Tel: +44(0) 01753 575 011
Fax: +44(0) 01753 811 359
sales@carclo-optics.com www.carclo-optics.com

Title	∅20mm OPTIC HOLDER (3.5mm x 3.5mm LEDS) WITH FLEXI-SLOTS				
Drawn by	P.SUTTON	Customer	CARCLO	Scale	2:1
THIRD ANGLE PROJECTION	GENERAL TOLERANCES UNLESS OTHERWISE STATED LINEAR: 0 ±0.25; 0.0 ±0.1; 0.00 ±0.05 ANGULAR: 0 ± 1°; 0.0 ±0.5°; 0.00 ±0.1°	CARCLO Optics CONFIDENTIAL: UNAUTHORISED COPYING, DISCUSSION & DISTRIBUTION PROHIBITED	DIMENSION IN mm	Format Size	A3
			CAD File	70231_lss_1	
			Part N°	REFER TO TABLE	Drw N° 70231